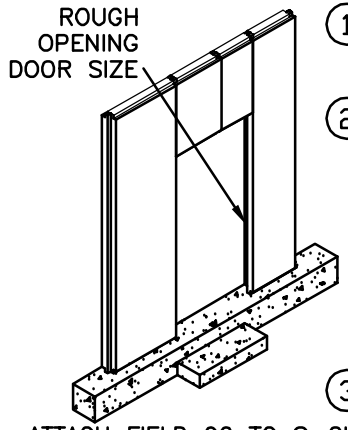

1 STEP 1:
FIELD CUT FOAM AS REQUIRED.

2 STEP 2:
ATTACH S-CLIP TO SHIPLAP OF ACSYS PANEL W/ 1/4"-14 X 3/4" SELF DRILLING FASTENERS @ 1'-0" O.C.

3 STEP 3:
ATTACH FIELD 90 TO S-CLIP W/ 1/4"-14 X 3/4" SELF DRILLING FASTENERS @ 1'-0" O.C.

4 STEP 4: ATTACH FO STUD TO HEAD AND JAMBS W/ 1/4"-14 X 3/4" SELF DRILLING FASTENERS @ 1'-0" O.C.

NOTE: FO STUD TO BE FIELD SLIT AND BENT. MUST OVERLAP ANY PANEL SHIPLAPS.

STEP #1
FIELD CUT FOAM

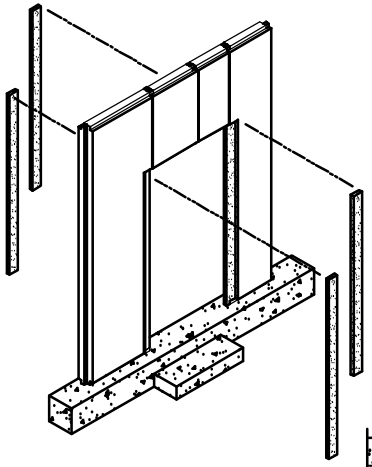

BUILDER NOTE:
FOAM MUST BE CUT AND REMOVED FROM THE SIDE OF THE PANEL WITH THE LONG LEG OF THE S-CLIP. (5" FROM THE END OF THE SHIPLAP.)

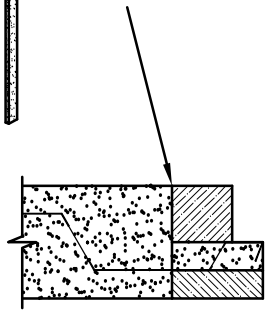

STEP #2
ATTACH S-CLIPS

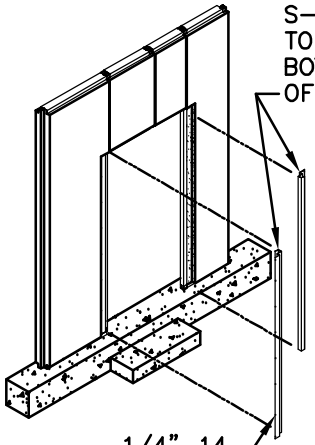

ATTACH S-CLIP TO CORE @ BOTH SIDES OF OPENING

(S-CLIP SHOULD BE ONE-PIECE WHENEVER POSSIBLE. IF A SPLICE IS REQUIRED, DO NOT SPLICE MID-SPAN. THE SPLICE SHOULD BE IN THE UPPER THIRD OR LOWER THIRD)

1/4"-14 X 3/4" SELF DRILLING FASTENERS 1'-0" O.C.

ATTACH S-CLIP

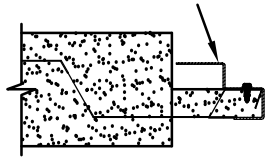

STEP #3
ATTACH FIELD 90

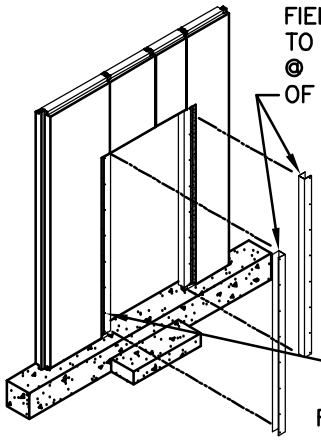

ATTACH FIELD 90 TO S-CLIP @ BOTH SIDES OF OPENING

ATTACH FIELD 90

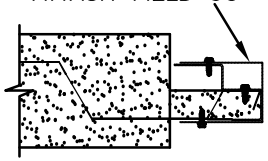

1/4"-14 X 3/4" SELF DRILLING FASTENERS 1'-0" O.C.

STEP #4
ATTACH FO STUD

BUILDER NOTE:
FO STUD TO BE SLIT AND BENT. MUST OVERLAP ANY PANEL SHIPLAPS.

(NOTE: FO STUD SHOULD BE ONE-PIECE AND NOT SPLICED TOGETHER)

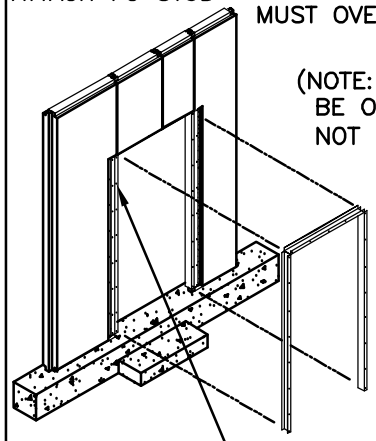

ATTACH W/D STUD

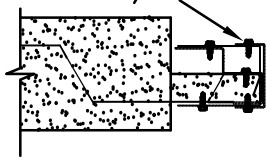

1/4"-14 X 3/4" SELF DRILLING FASTENERS 1'-0" O.C.

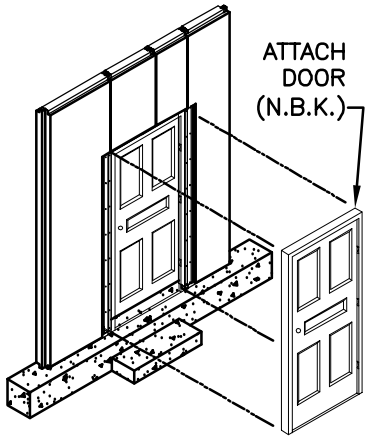

ATTACH DOOR (N.B.K.)

D606	FACTORY CUT DOOR WITH FO STUD	ACSYS®	REV DATE
			12-11-07