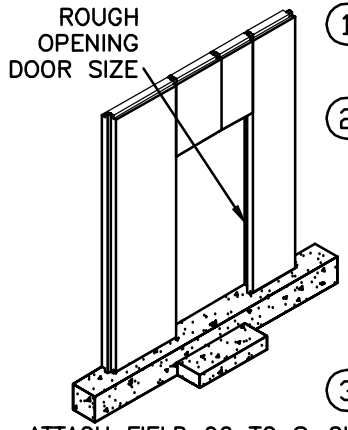

1 STEP 1:
FIELD CUT FOAM AS REQUIRED.

2 STEP 2:
ATTACH S–CLIP TO SHIP LAP OF ACSYS PANEL W/ 1/4"–14 X 3/4" SELF DRILLING FASTENERS @ 1'–0" O.C.

3 STEP 3:
ATTACH FIELD 90 TO S–CLIP W/ 1/4"–14 X 3/4" SELF DRILLING FASTENERS @ 1'–0" O.C.

4 STEP 4: ATTACH W/D STUD TO HEAD AND JAMBS W/ 1/4"–14 X 3/4" SELF DRILLING FASTENERS @ 1'–0" O.C.

NOTE: W/D STUD TO BE FIELD SLIT AND BENT. MINIMUM 12" EXTENDING FROM CORNER. MUST OVERLAP ANY PANEL JOINTS.

STEP #1
FIELD CUT FOAM

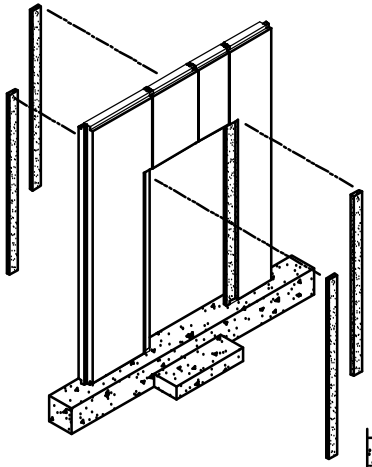

BUILDER NOTE:
FOAM MUST BE CUT AND REMOVED FROM THE SIDE OF THE PANEL WITH THE LONG LEG OF THE S–CLIP. (5" FROM THE END OF THE SHIPLAP.)

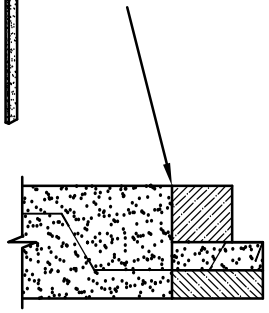

STEP #2
ATTACH S–CLIPS

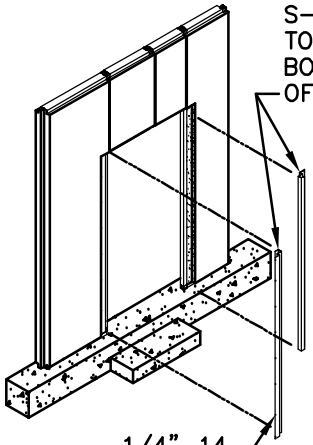

ATTACH S–CLIP TO CORE @ BOTH SIDES OF OPENING

(S–CLIP SHOULD BE ONE–PIECE WHENEVER POSSIBLE. IF A SPLICE IS REQUIRED, DO NOT SPLICE MID–SPAN. THE SPLICE SHOULD BE IN THE UPPER THIRD OR LOWER THIRD)

1/4"–14 X 3/4" SELF DRILLING FASTENERS 1'–0" O.C.

ATTACH S–CLIP

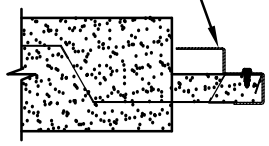

STEP #3
ATTACH FIELD 90

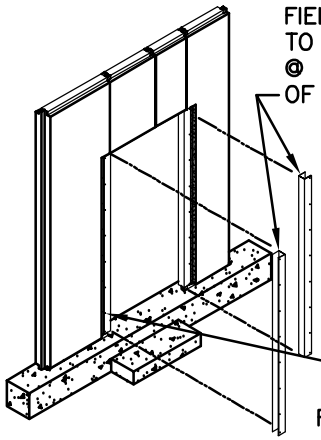

ATTACH FIELD 90 TO S–CLIP @ BOTH SIDES OF OPENING

ATTACH FIELD 90

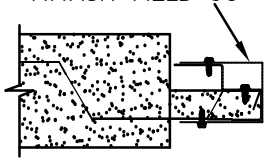

1/4"–14 X 3/4" SELF DRILLING FASTENERS 1'–0" O.C.

STEP #4
ATTACH W/D STUD

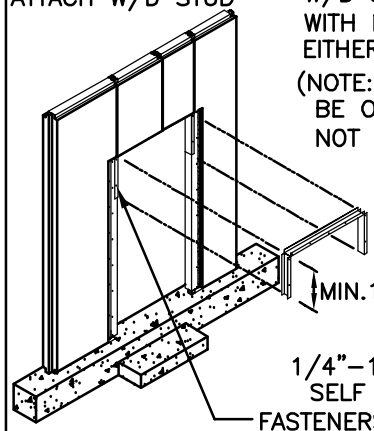

BUILDER NOTE:
W/D STUD TO BE SLIT AND BENT WITH MIN. 12" EXTENDING FROM EITHER CORNER.

(NOTE: W/D STUD SHOULD BE ONE–PIECE AND NOT SPLICED TOGETHER)

ATTACH W/D STUD

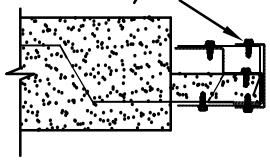

1/4"–14 X 3/4" SELF DRILLING FASTENERS 1'–0" O.C.

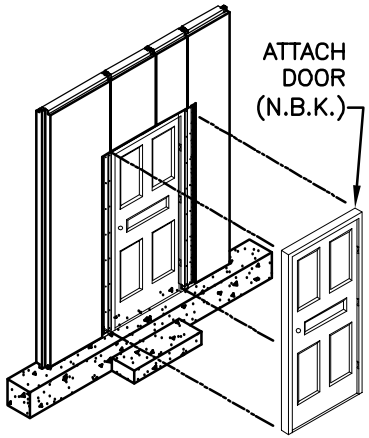

ATTACH DOOR (N.B.K.)

D605	FACTORY CUT DOOR INSTALLATION GUIDE	ACSYS®	REV DATE
			12–11–07