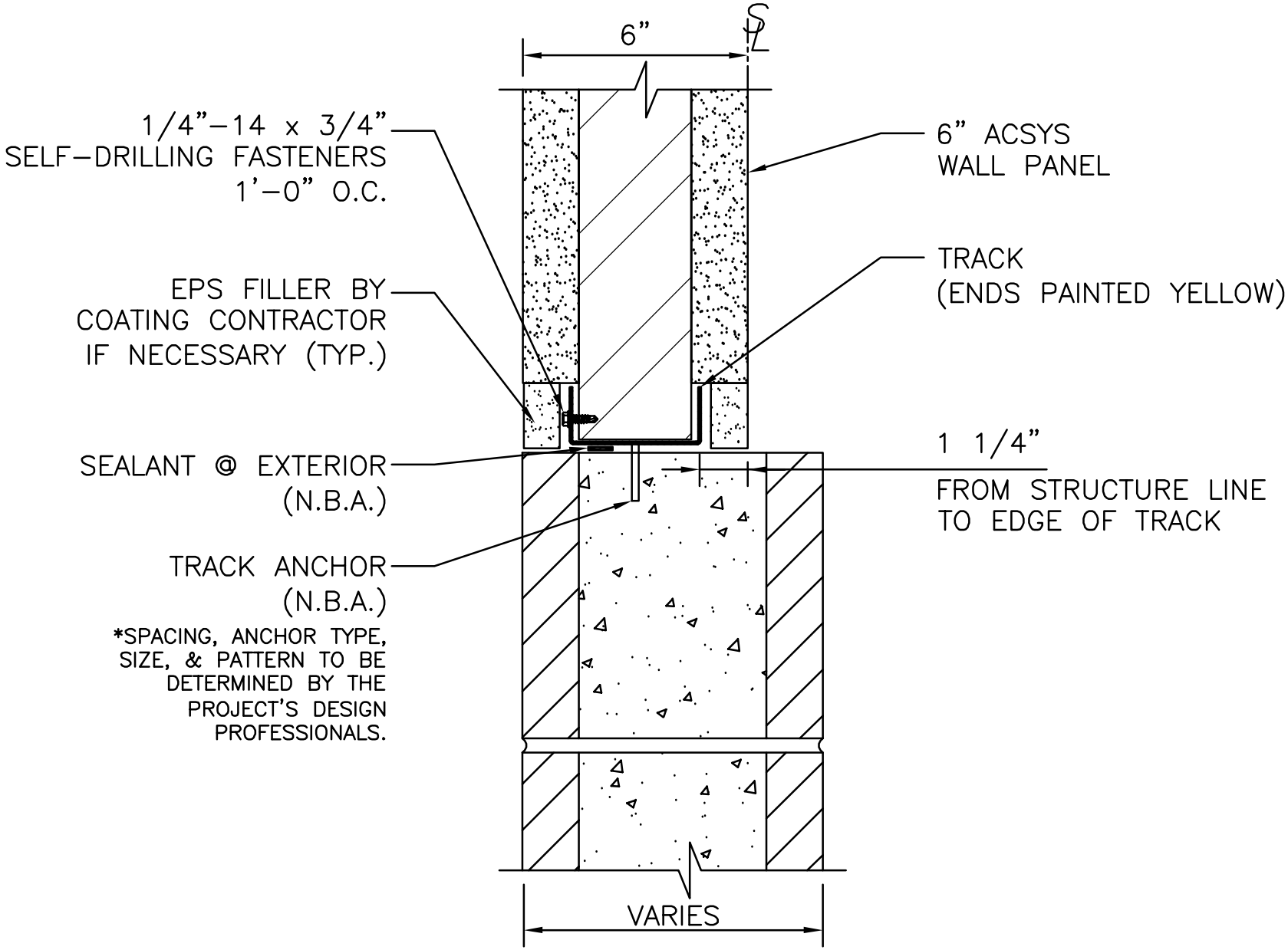

B610	BASE DETAIL ON CMU WALL	ACSYS ®	REV DATE
			12–11–07